THERMALTRONICS

Check for latest datasheet

HTN-SJ32 參數表

技術參數

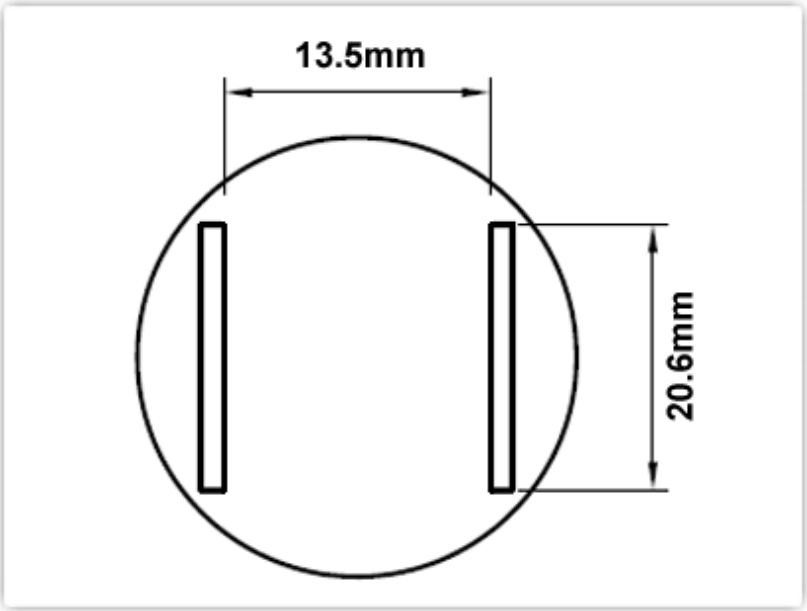

HTN-SJ32

熱風槍嘴 ***13.5mm x 20.6mm, SOJ 32***

熱風嘴形狀:	SOJ 32
熱風嘴寬度:	13.50mm (0.53")
熱風嘴高度:	20.60mm (0.81")

熱風嘴系列:	HTN系列
RoHS 標准 / Lead Free:	符合
兼容產品型號:	H-SOJ32
適用於:	TMT-HA200, TMT-HA300, HCT-900

材料成份

Stainless Steel

RoHS Compliant

All components are RoHS compliant and Lead-Free.

Standard Connector
22mm (0.87") diameter

Copyright © 2010-2015 Thermaltronics All Rights Reserved